DRG NO. 5010260

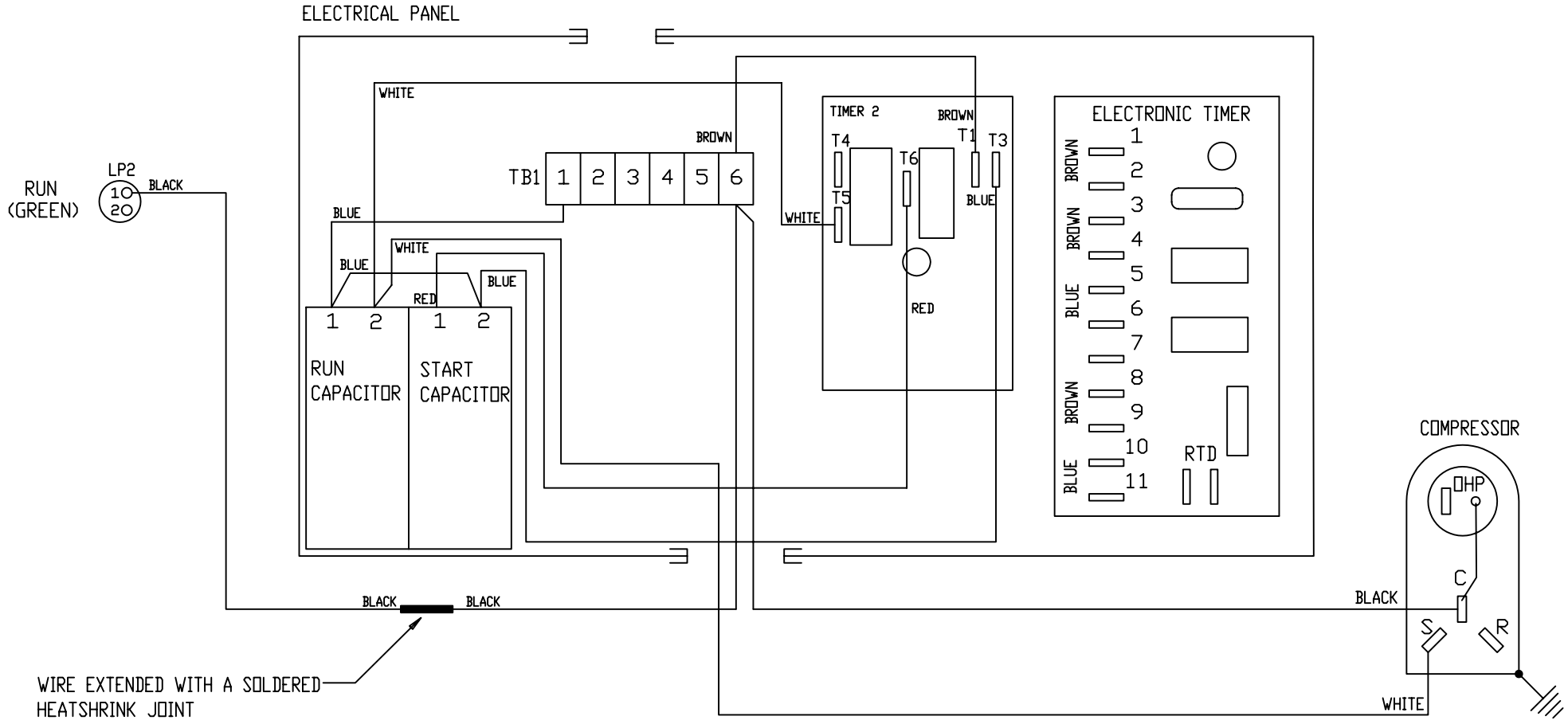

DRAWN J.G LAVERICK	ISS.	1										
CHECKED	DATE	08.11.93										
APPROVED												
SCALE 3:4	C/N											

INSPECTION PROCEDURE

MATERIAL

FINISH

TOLERANCE UNLESS STATED

DIMENSIONS IN m.m.

Ebac Limited

TITLE
ELECTRICAL PANEL ASSEMBLY
WIRING DIAGRAM

SECURITY CLASSIFICATION

DRG.NO.
5010260

A3