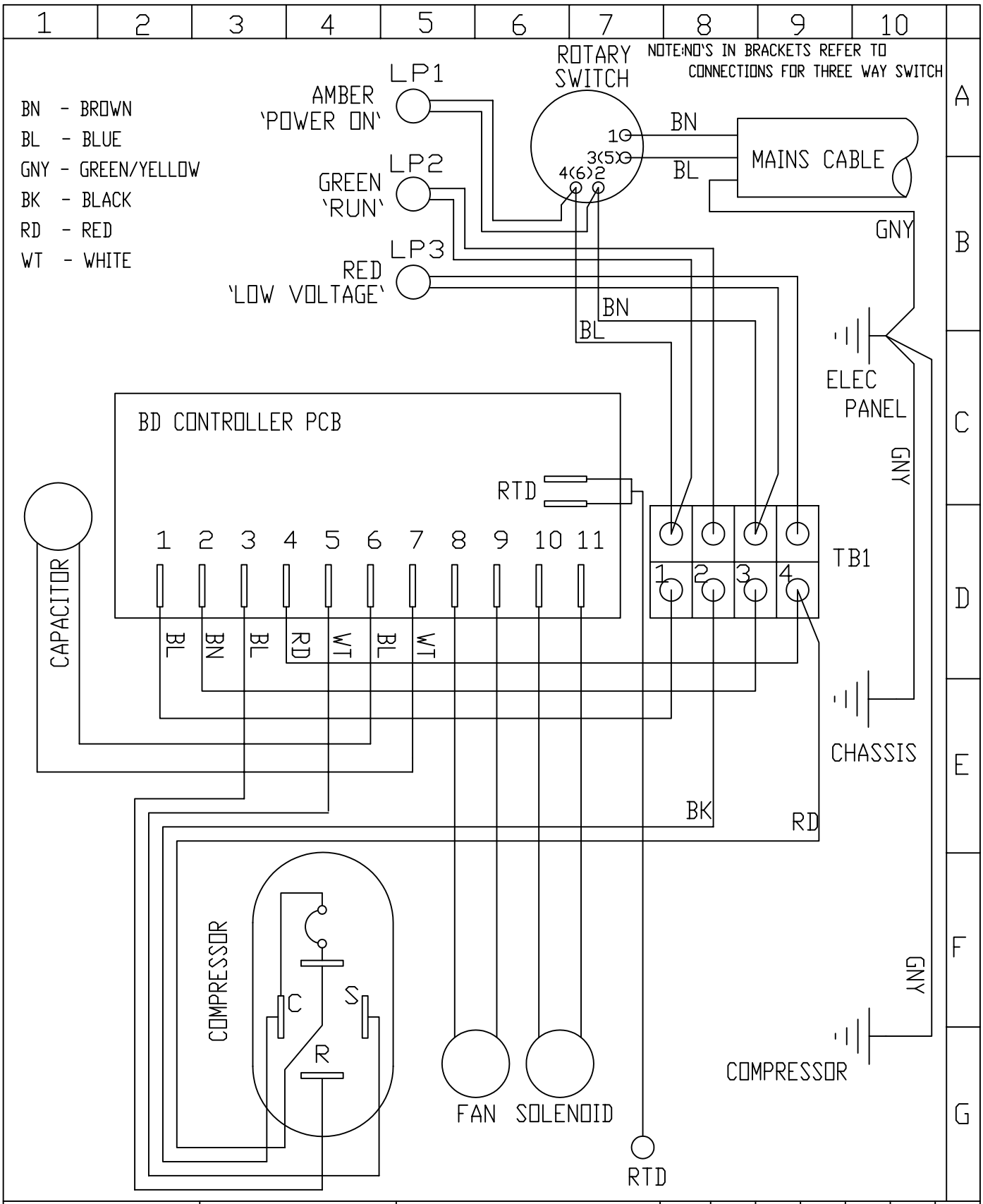

MATERIAL_____	FINISH_____	TOLERANCE UNLESS STATED _____	ISS	1	2				
_____	_____	DIMENSIONS IN m.m.	DATE	23 92	20 5 92				
SCALE NTS	Ebac Limited		C/N		4691 RE				
DRAWN R ELLIOTT			SECURITY CLASSIFICATION						
CHECKED	TITLE WIRING DIAGRAM FOR BUILDING DRYER WITH LV CUT OUT		INSPECTION PROCEDURE						
APPROVED			DRG. No. 5010250						A4