| ISSUE | DATE | AMENDMENTS |
|---|---|---|
| 1 | 14.03.95 | |

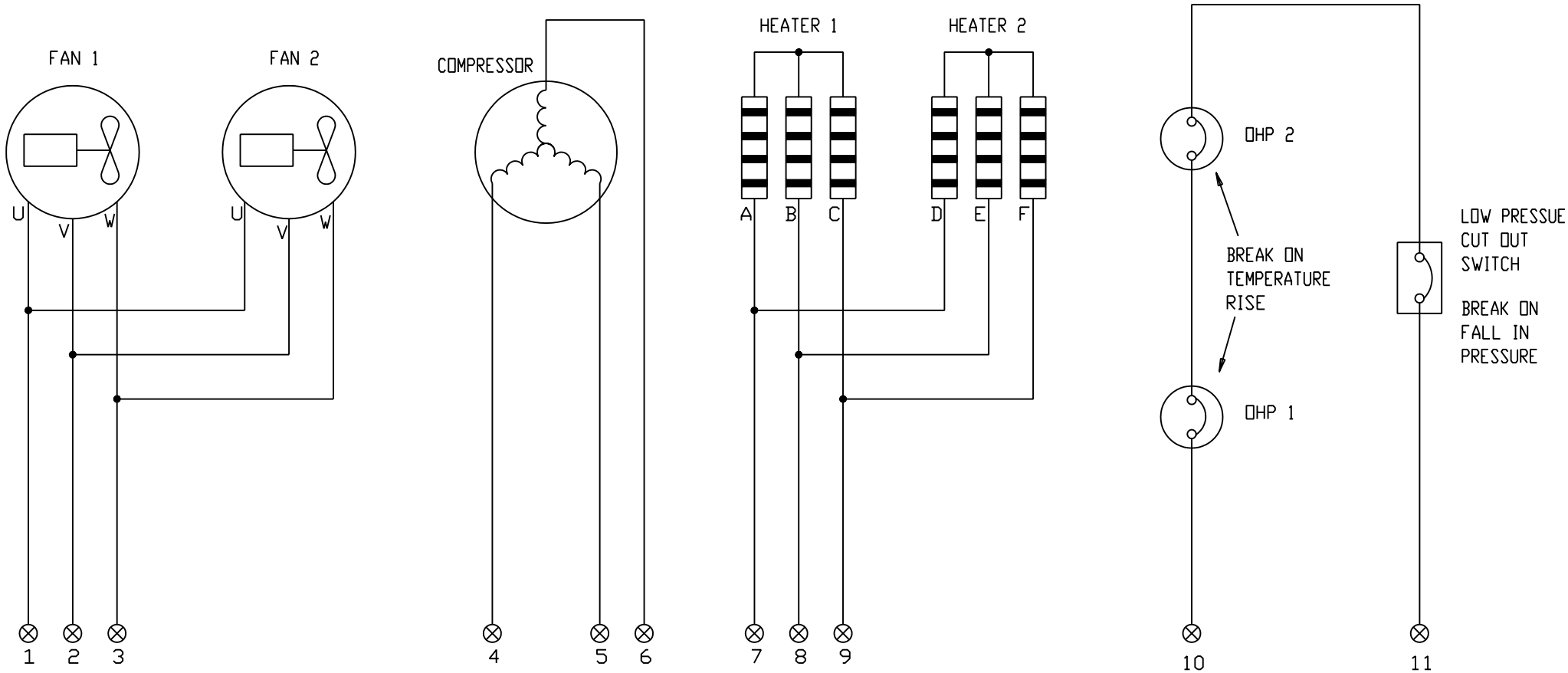


© 1993

Ebac LIMITED BISHOP AUCKLAND ENGLAND

3RD ANGLE PROJECTION

DO NOT SCALE IF IN DOUBT ASK

DIMENSIONS IN m.m.
TOLERANCES UNLESS OTHERWISE STATED
0. ± 1
0.0 ± 0.25
0.00 ± 0.05
ANGULAR ± 0.5 DEGREE

TITLE: WIRING SCHEMATIC

MATERIAL

FINISH

DRAWN : J.G LAVERICK

CAD SCALE :

DRG.NO. 5020232

SHEET 1 OF 1

A3