DRG NO. 5020153

3RD ANGLE PROJECTION

DESCRIPTION	PART No.
REFERENCE TO GENERAL ASSEMBLY	1013700
REFERENCE TO GENERAL ASSEMBLY	1138100
REFERENCE TO GENERAL ASSEMBLY	1138600
REFERENCE TO WIRING DIAGRAM	5010116
REFERENCE TO WIRING DIAGRAM	5010185

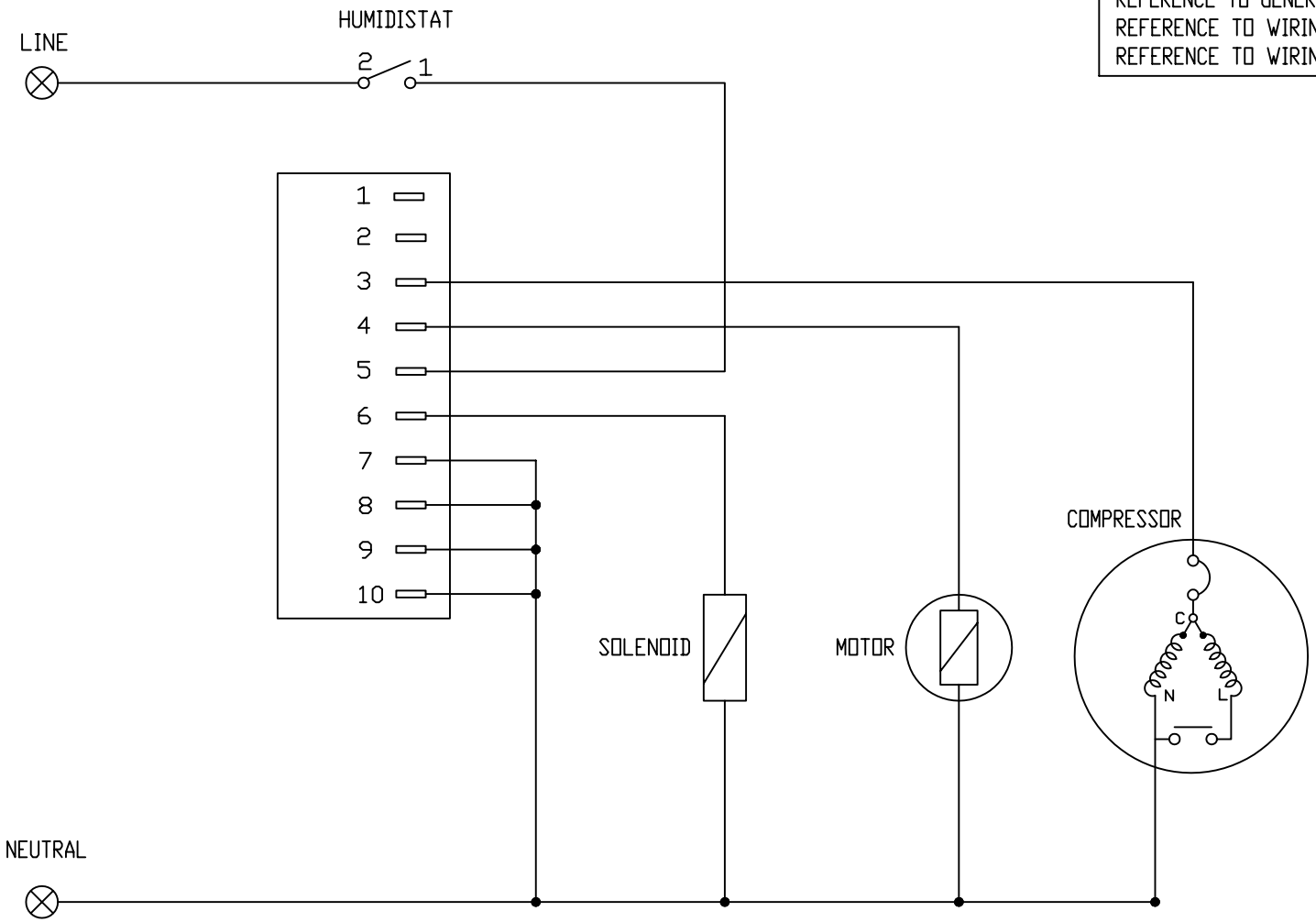

DRAWN J.G LAVERICK	ISS.	1	2								
CHECKED	DATE	18.10.93	24/10/96								
APPROVED											
SCALE	C/N										

INSPECTION PROCEDURE

MATERIAL

FINISH

TOLERANCE UNLESS STATED

DIMENSIONS IN m.m.

Ebac Limited

TITLE

WIRING SCHEMATIC FOR CD30

SECURITY CLASSIFICATION

DRG.NO.

5020153

A3