DRG. NO. 5020227

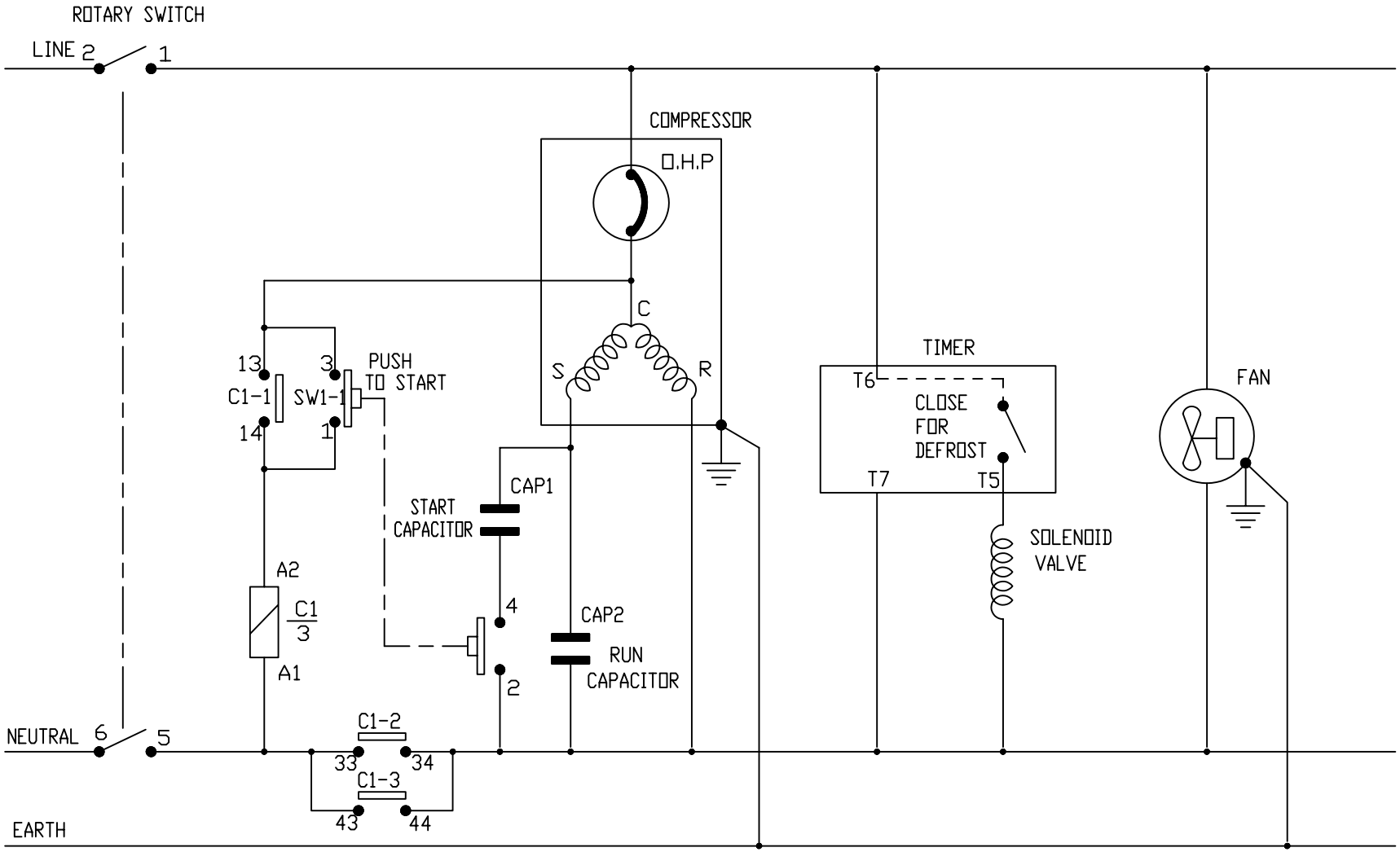

DRAWN J.G LAVERICK	ISS.	1										
CHECKED	DATE	29.04.93										
APPROVED												
SCALE 1/1	C/N											

Ebac Limited

SECURITY CLASSIFICATION

DRG.NO. 5020227

INSPECTION PROCEDURE

MATERIAL

FINISH

TOLERANCE UNLESS STATED

DIMENSIONS IN m.m.

TITLE WIRING SCHEMATIC FOR SINGLE VOLTAGE BD150

A3